ELITE ROBOTS

COBOTS & SOLUTIONS
PRODUCT PORTFOLIO

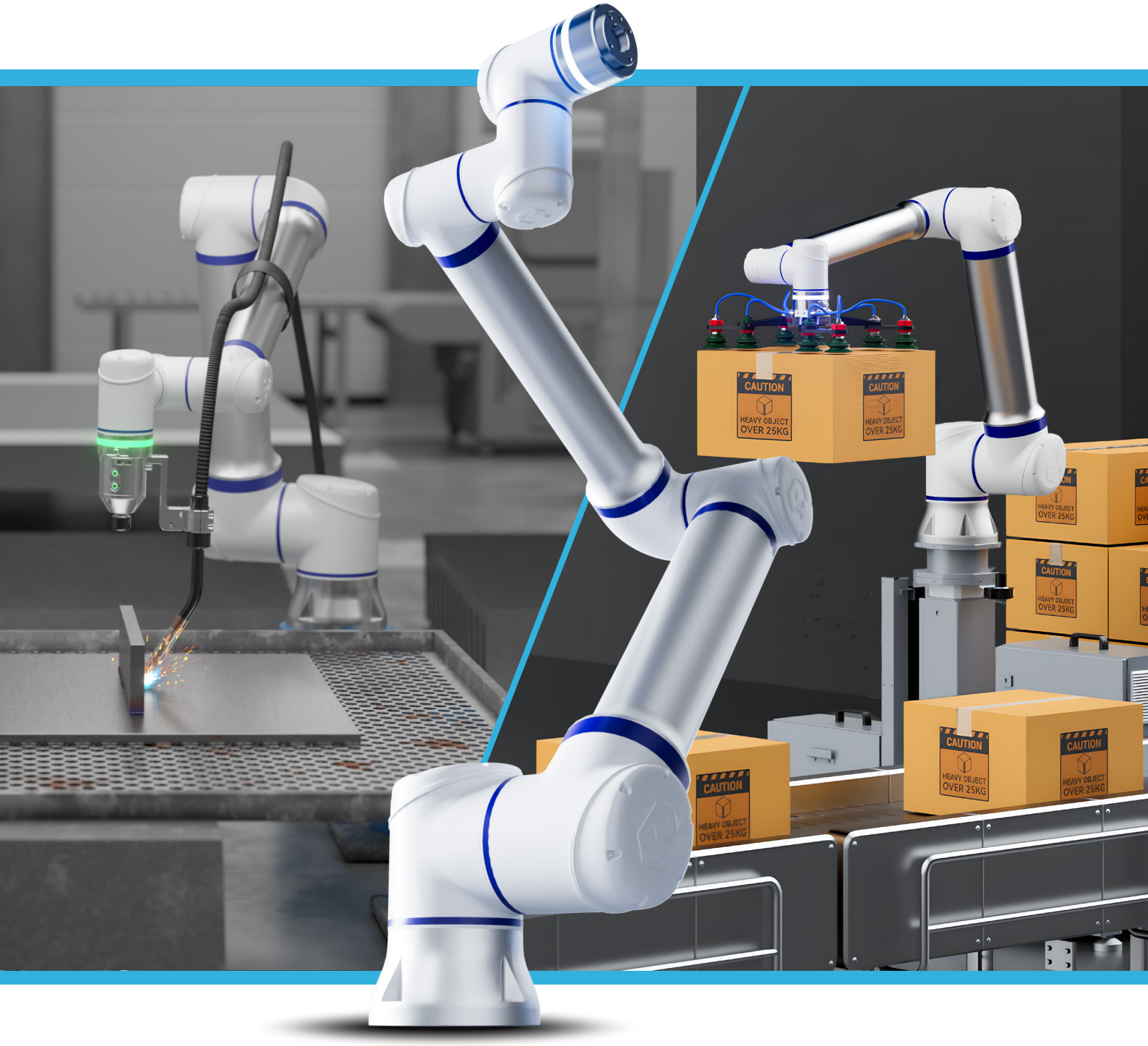

www.eliterobots.com

ELITE ROBOTS

CS SERIES

Collaborative Robots Line

Enhanced Safety
31 safety functions (PL d Cat. 3 for SF01-SF30; PL b Cat. 1 for SF31)

Graphic Programming
with expandable UI supporting **custom plugins** and **application wizards**

Greater Openness
Compatible with multiple protocols. **PNP-NPN switch mode**

High Ingress Protection
Standard **IP65** (optional **IP68**)

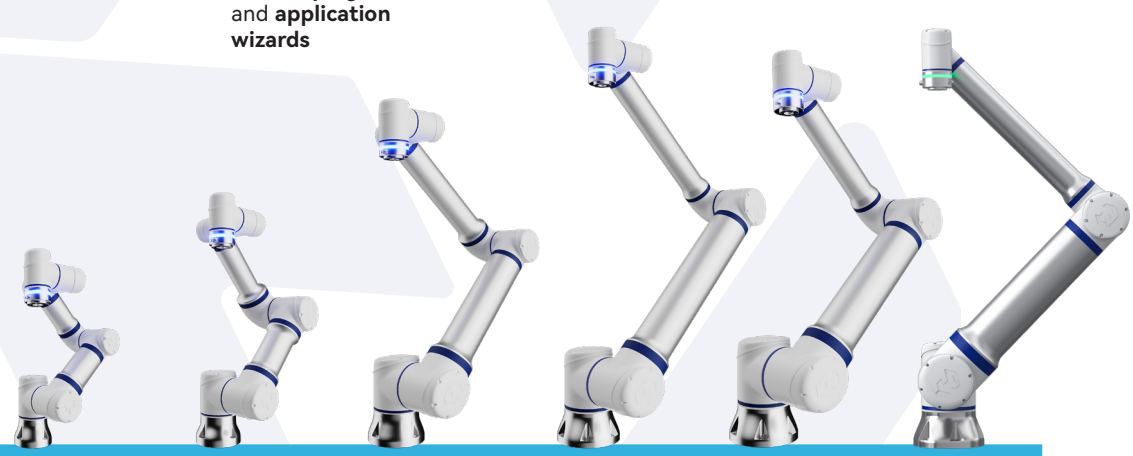

	CS63	CS66	CS612	CS620	CS625	CS530H*
Payload	3 kg / 6.6 lb	6 kg / 13.2 lb	12 kg / 26.4 lb	20 kg / 44 lb	25 kg / 55.1 lb	30 kg / 66.1 lb
Radius	624 mm / 24.5 in	914 mm / 35.9 in	1304 mm / 51.3 in	1800 mm / 70.8 in	1500 mm / 59 in	1522 mm / 59.9 in
Repeatability	±0.02 mm	±0.03 mm	±0.05 mm	±0.1 mm	±0.08 mm	±0.1 mm
TCP Speed	2.0 m/s	2.8 m/s	3.4 m/s	3.9 m/s	3.3 m/s	4.0 m/s

ISO 13849, ISO 10218 · UL, CE, KCs · ISO 14644 cleanroom class 5, RoHS · SEMI-S2

** The CS530H robotic arm can only be supplied as part of the CP series palletizing solution.*

Highlights

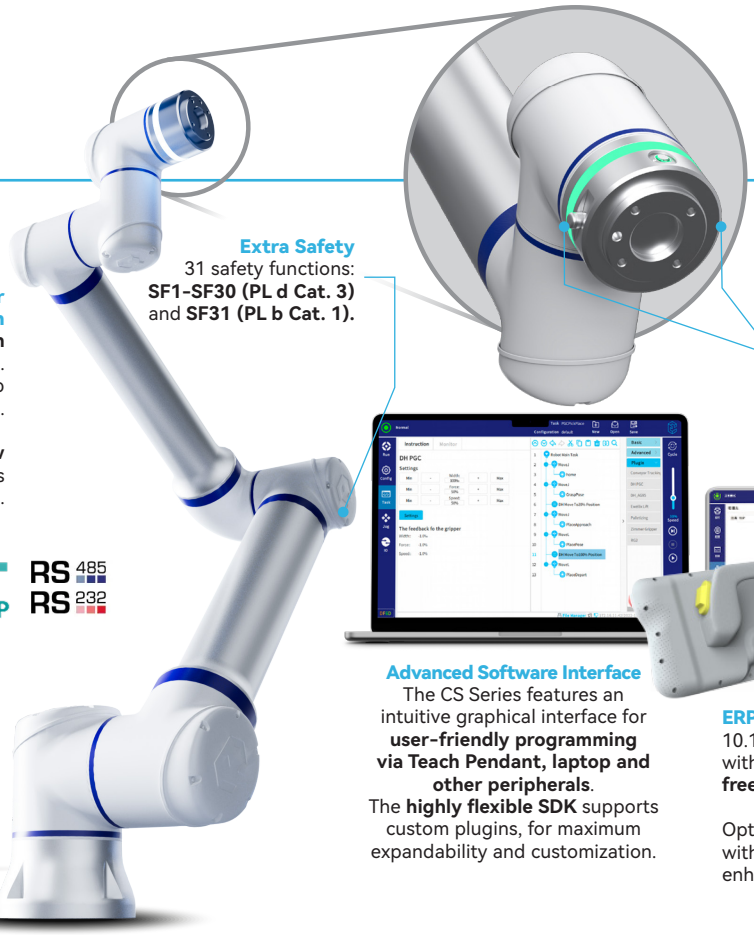

Extra Safety
31 safety functions: **SF1-SF30 (PL d Cat. 3)** and **SF31 (PL b Cat. 1).**

Highly Expandable Controller with mini OEM option
24 DI (8 config.) with **PNP and NPN switch mode** / 24 DO (8 config.).
It supports **HDMI® 2.1** for transmissions up to 8K@60Hz.

Optional mini OEM controller with **very low weight and compact dimensions** for users who want to create their own custom design.

PROFINET · EtherNet/IP · Modbus · FINS TCP · RS 485 · RS 232 · HDMI 2.1

High output capacity for EOAT
Standard 8-pin connector with **capacity up to 3A**. Additional 4-pin connector **up to 5A for ≥20 kg (44 lb) payloads**.

Advanced Software Interface
The CS Series features an intuitive graphical interface for **user-friendly programming via Teach Pendant, laptop and other peripherals**.
The **highly flexible SDK** supports custom plugins, for maximum expandability and customization.

ERP500/500S Teach-Pendant
10.1" detachable Teach Pendant with rear button for convenient **free-drive programming**.

Optional version (**ERP500S**) with **3-modes enable key** for enhanced safety.

CP SERIES

All-in-1 Collaborative Palletizing Solution

With a **maximum payload of 30kg (66.1 Lbs)** and a **stacking height of up to 2600mm (102.3 in)**, the Elite Robots **CP (Collaborative Palletizer) Series** is ready to streamline your end-of-line operations. Ensuring a **fast installation** just right of the box, this **cost-effective, safe and easy to use** (no programming skills required) **modular palletizing solution** can accommodate diverse payloads and pallet heights and easily adapt to different customer requirements.

High Payload
Up to **30 Kg / 66.1 Lbs**

High Stacking Height
Up to **2600 mm / 102.3 in**

Up to 20 Boxes/Min
with dual vacuum cup

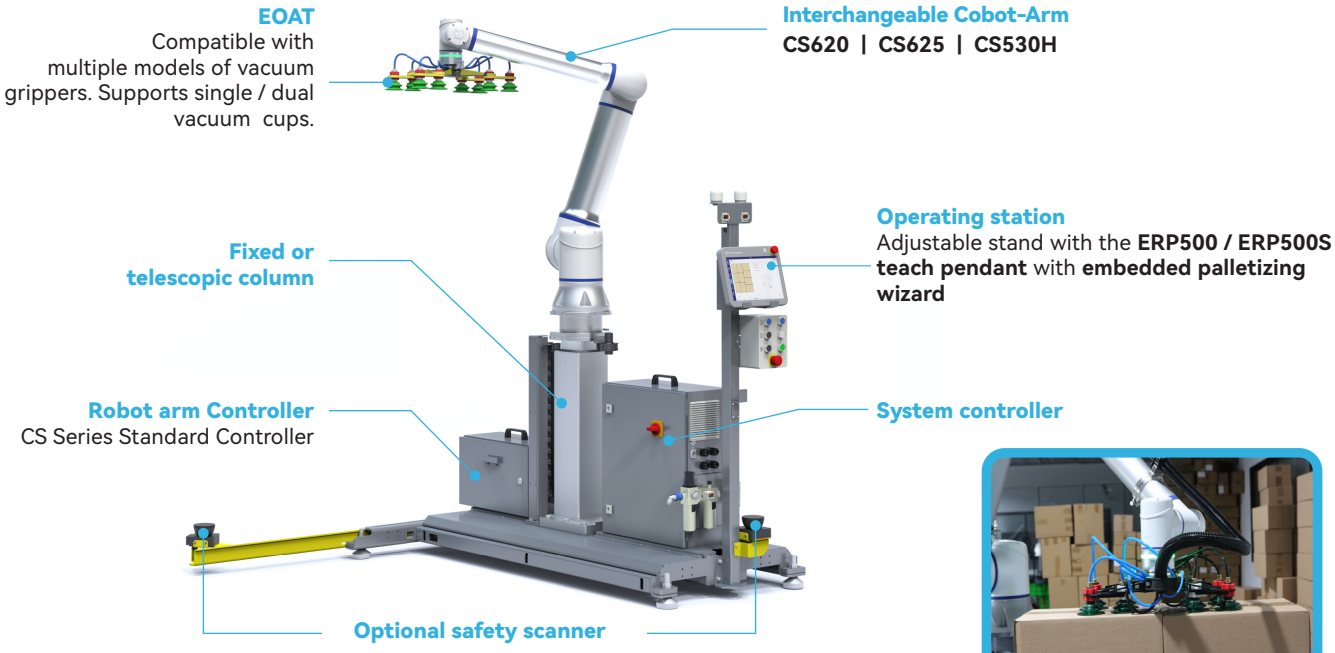

The CP Series in dual-cup mode

Fixed or lifting base column

The combination of the 3 cobot arms with the two alternative base columns (**CPF= Fixed Column**; **CPL= Lifting Column**) offers a rich selection of variants capable of handling **payloads between 20-30kg (44-66.1 Lbs), pallets up to 1200mm (47.2 in) in length/width** and **stacking height up to 2600mm (102.3 in)**. This makes the CP Series ideal to support applications across various industries.

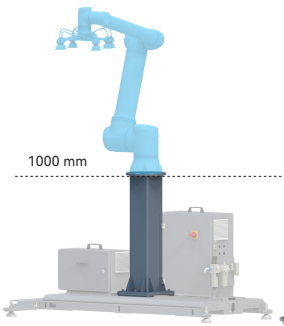

CPF10

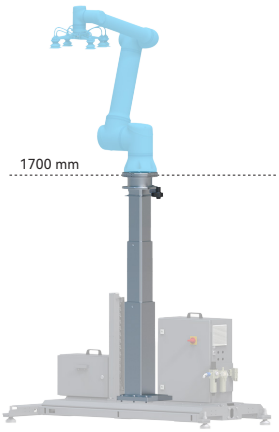

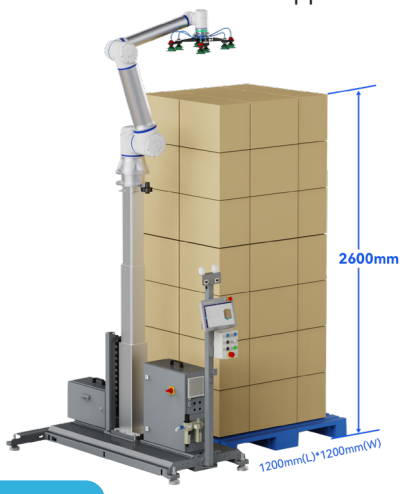

CPL07

CW SERIES

Welding Solution with Copilot

Elite Robots **CW (Collaborative Welder) Series** is a flexible, compact and modular solution which combines **Elite Robots proprietary hardware and software** with the **welding equipment from first-class manufacturers**. Easy to install and fast to deploy and redeploy, the CW series is perfectly suited to different types of production, from large-scale to HMLV manufacturing, and industrial sectors.

Optional Copilot
The Elite Robots proprietary piloting tool enables easy programming of the weld trajectory in any direction (x-y-z)

Modular Design
Interchangeable welding machine and torch. Supports multi-station and other configuration types.

User-friendly
Easy to program thanks to the embedded proprietary welding application wizard. Supports additional expansion.

Interchangeable Welding HW
350A/500A machines; air/water-cooled torches.

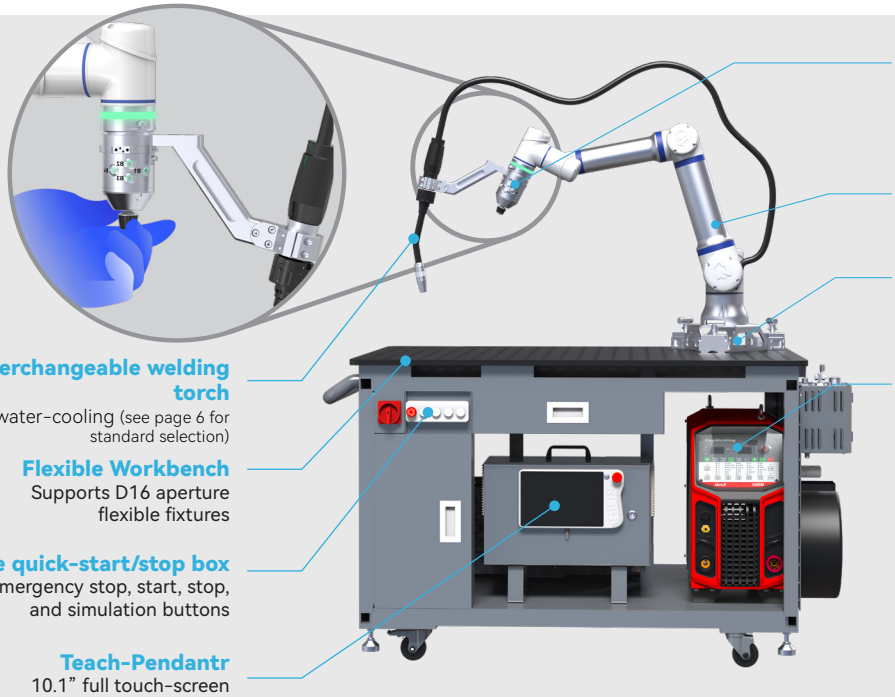

Welding Copilot
Optional Elite Robots proprietary tool for manual planning of the welding trajectory

Collaborative Robots
CS66 | CS612 | CS620

Magnetic Base
Supports flexible multi-angle installation.
- Max pull-off force per magnet: **180 kgf**
- Shear force per magnet: **36 kgf**

Interchangeable welding machine
350A/500A options (see page 6 for standard selection)

Interchangeable welding torch
Air/water-cooling (see page 6 for standard selection)

Flexible Workbench
Supports D16 aperture flexible fixtures

Movable quick-start/stop box
Emergency stop, start, stop, and simulation buttons

Teach-Pendantr
10.1" full touch-screen

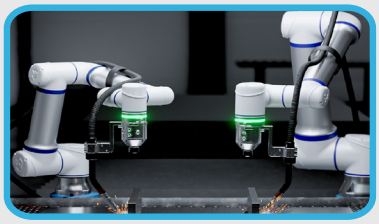

The modular design supports multi-station and other configuration types

Automatic programming and other user-friendly features

Touch-sensing

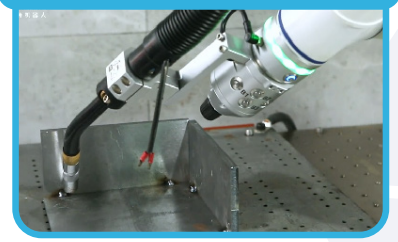

Touch-sensing function for auto-adjustment of the weld trajectory

Easy multi-layer configuration

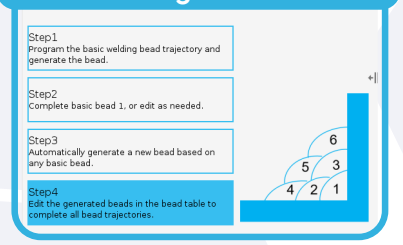

Automatically generates each subsequent step based on the programmed offset of the first step

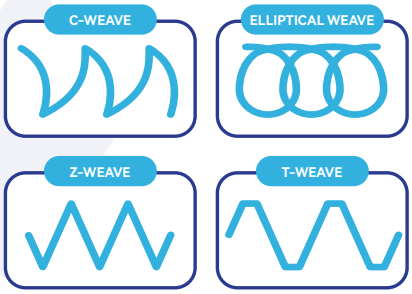

4 weaving modes: C-weaving, Elliptical weaving, Z-weaving, and T-weaving

Compatible welding brands include:

AOTAI, MEGMEET, Fronius, LINCOLN ELECTRIC, KEMPPI, ewm, ESAB, GYS, Miller, MERKLE, SynerBot, ...and more

CS Series Specs

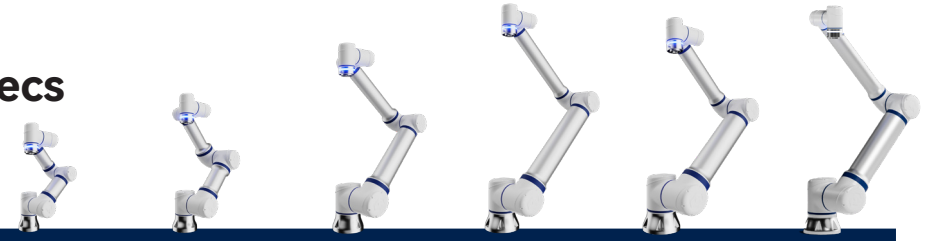

Robot arm

		CS63	CS66	CS612	CS620	CS625	CS530H*
Payload		3 kg / 6.6 lb	6 kg / 13.2 lb	12 kg / 26.4 lb	20 kg / 44 lb	25 kg / 55.1 lb	30 kg / 66.1 lb
Radius		624 mm / 24.5 in	914 mm / 35.9 in	1304 mm / 51.3 in	1800 mm / 70.8 in	1500 mm / 59 in	1522 mm / 59.9 in
Repeatability		±0.02mm	±0.03mm	±0.05mm	±0.1mm	±0.08mm	±0.1mm
Axis		6					5
Joints rotation	J1-J3	±360°	±360°	±360°	±360°	±360°	±360°
	J4	±360°	±360°	±360°	±360°	±360°	-
	J5	±360°	±360°	±360°	±360°	±360°	-
	J6	±360°	±360°	±360°	±360°	±360°	±360°
Joints speed	J1-J2	180°/s	150°/s	120°/s	125°/s	125°/s	125°/s
	J3	230°/s	180°/s	150°/s	150°/s	150°/s	150°/s
	J4	230°/s	230°/s	180°/s	210°/s	210°/s	-
	J5-J6	230°/s	230°/s	180°/s	210°/s	210°/s	210°/s
Max TCP Speed		2.0 m/s	2.8 m/s	3.4 m/s	3.9 m/s	3.3 m/s	4.0 m/s
IP rating		IP65 (optional IP68)					
Temperature range		-10~50℃ / 14℉~122℉					
Relative humidity		<90% (non-condensing)					
Typical power usage		185w	250w	435w	625w	625w	600w
Mounting		Any orientation					Front/Reverse
Tool I/O connector & supply		M8, 8pin | 0 / 12V / 24V; 3A / 2A / 1A			T1: M8, 8pin | 0 / 12V / 24V; 3A / 2A / 1A T2: Ø 12.8mm, 4pin | 24 V; 5A		
Tool I/O ports & communication		4 config. DI / DO; 1 AI, 1 AO | RS485					
Footprint		128 mm / 5 in	150 mm / 5.9 in	190 mm / 7.4 in	240 mm / 9.4 in	240 mm / 9.4 in	240 mm / 9.4 in
Weight		15 kg / 33 lbs	20 kg / 44 lbs	34 kg / 74.9 lbs	60 kg / 132.2 lbs	58 kg / 127.8 lbs	58 kg / 127.8 lbs
Material		Aluminum, steel, plastic, rubber					
Cable length		5.5 m / 216.5 in**					
Programming		Python-script, graphical proprietary user interface, free-drag/offline programming					

** The CS530H robotic arm can only be supplied as part of the CP series palletizing solution.*
*** Optional cable lengths of 1.5 m (59 in), 3 m (118 in) and 8 m (314.9 in) and additional extensions up to 10 m (393.7 in) are available.*

Controllers

Model	ERB3C300 / ERB3C600 / ERB3C2K0	ERB1C600ME-Mini
Type	Standard AC	DC MINI
I/O ports	16 x DI (PNP/NPN switch), 16 x DO; 8 x CI (PNP/NPN switch), 8 x CO; 2 x AI, 2 x AO, 4 x High-Speed DI	8 x DI, 8 x DO; 8 x CI (PNP/NPN switch), 8 x CO; 2 x AI, 2 x AO
I/O power supply	24V/2A	
Communication	Ethernet TCP/IP, UDP, Modbus TCP/RTU, RS485/RS232, Profinet slave, Ethernet/IP slave, CCLink slave (optional)	Ethernet, Profinet slave, Ethernet/IP slave, FINS TCP, Modbus TCP/RTU, RS485, CCLink slave (optional)
Dim (W x H x D)	505mm × 447mm × 257mm	164.2mm × 130mm × 72mm
IP rating	IP44	IP20
Weight	13kg * / 15kg **	1.5 kg
Power source	100-240 VAC, 50-60 Hz	45~55VDC
Operating Temperature	ERB3C300 / ERB3C2K0: 0°C~50°C ERB3C600: -10°C~50°C	-10°C~50°C
Ambient humidity	90%	
Material	Aluminum alloy, Steel	

Teach Pendants

Model	ERP500 (standard)	ERP500S (optional)
Dim (W x H x D)	304mm x 169mm x 93mm	
Resolution	1280 x 800	
Screen size	10.1"	
Front buttons	12 motion-control buttons; 2 speed-adjustment buttons	
Rear button	Free-drive programming	3-position enable key
IP rating	IP54	
Weight	0.96 kg	
Cable length	5.5 m	
Operating temperature	-10°C~50°C	
Ambient humidity	95%	
Material	Aluminum alloy, plastic, silicone rubber	

* For cobots: **CS63 - CS66 - CS612** | ** For cobots: **CS620 - CS625 - CS530H**

CP Series Specs

Base	Arm	Payload	Max Pallet Size (W x L)	Max Stacking Height
CPF10	CS620	20 kg / 44 lbs	1200 mm x 1200 mm 47.2 in x 47.2 in	1700 mm / 66.9 in
	CS625	25 kg / 55.1 lbs	1200 mm x 1000 mm 47.2 in x 39.3 in	1600 mm / 62.9 in
	CS530H	30 kg / 66.1 lbs	1200 mm x 1000 mm 47.2 in x 39.3 in	1600 mm / 62.9 in
CPL07	CS620	20 kg / 44 lbs	1200 mm x 1200 mm 47.2 in x 47.2 in	2600 mm / 102.3 in
	CS625	25 kg / 55.1 lbs	1200 mm x 1000 mm 47.2 in x 39.3 in	2300 mm / 90.5 in
	CS530H	30 kg / 66.1 lbs	1200 mm x 1000 mm 47.2 in x 39.3 in	2300 mm / 90.5 in

Performance & Common Specs

Max Speed	10 boxes/min (single vacuum cup) 20 Boxes/min (dual vacuum cup)
Operating Temperature	0~50°C / 32°F~122°F
Peak Power Consumption	2~3.5kW
Power Source	Single-phase 220VAC/110VAC 50~60Hz
Footprint	1400mm x 1700mm / 55.1 in x 66.9 in

CW Series Accessories Specs

Welding Machine	MEGMEET DEX2 500MPR	MEGMEET AKSEN NOVA 500	AOTAI MAG350PRO PLUS	AOTAI NBC 500RP PLUS
Duty cycle	100% @ 500A		100%	
Rated current range	30-500A		60-350A	30-500A
Set voltage range	15.5–39V	12–45V	17-31.5V	15.5-39V
Main features	DC, low spatter, critical pulse	DC, short arc pulse, constant penetration	Ultra-low spatter, ultra-short arc pulse, constant penetration	Fast pulse
Typical welding plate	Carbon steel, ordinary low-alloy steel, galvanized sheet, stainless steel 2.5mm and above	Carbon steel, ordinary low-alloy steel, galvanized sheet, stainless steel 2.5mm and above	Carbon steel, ordinary low-alloy steel, galvanized sheet, stainless steel 0.7-8mm	Carbon steel, ordinary low-alloy steel, galvanized sheet 8-15mm, stainless steel 8mm and above
Recommended for	Construction, machinery, steel, automotive and other vehicles, containers, energy industry.	Construction, machinery, steel.	Construction, machinery, steel, auto parts, and more.	Shipbuilding, wind turbine industry, and more.

Welding Torch	GLOBAL LTD. GLA500	GLOBAL LTD. GLA350	TRM TECHNOLOGY TRM605WHD	TRM TECHNOLOGY TRM501
Rated current	500A	350A	550A (w/ CO_2); 500A (w/ mixed gas)	550A (w/ CO_2); 350A (w/ mixed gas)
Duty cycle	100%		100%	
Applicable Welding Wire	0.8-1.6mm		0.8-1.6mm	
Cooling method	Water-cooled	Air-cooled	Water-cooled	Air-cooled
Supports Copilot	✓	✓	-	-
Anti-collision sensor	-	-	✓	✓
Compatible welding machines	MEGMEET DEX2 500MPR Aksen Nova 500 AOTAI NBC 500RP Plus	AOTAI MAG350PRO Plus	MEGMEET DEX2 500MPR Aksen Nova 500 AOTAI NBC 500RP Plus	AOTAI MAG350PRO Plus

Torch Cleaner	GLOBAL LTD. GL-2000S	TRM TECHNOLOGY SC220A SE
Functions	Wire cutting, lubricating oil spraying	Wire cutting, lubricating oil spraying